Current part is item (5) on diagram. Available at www.oshkoshequipment.com

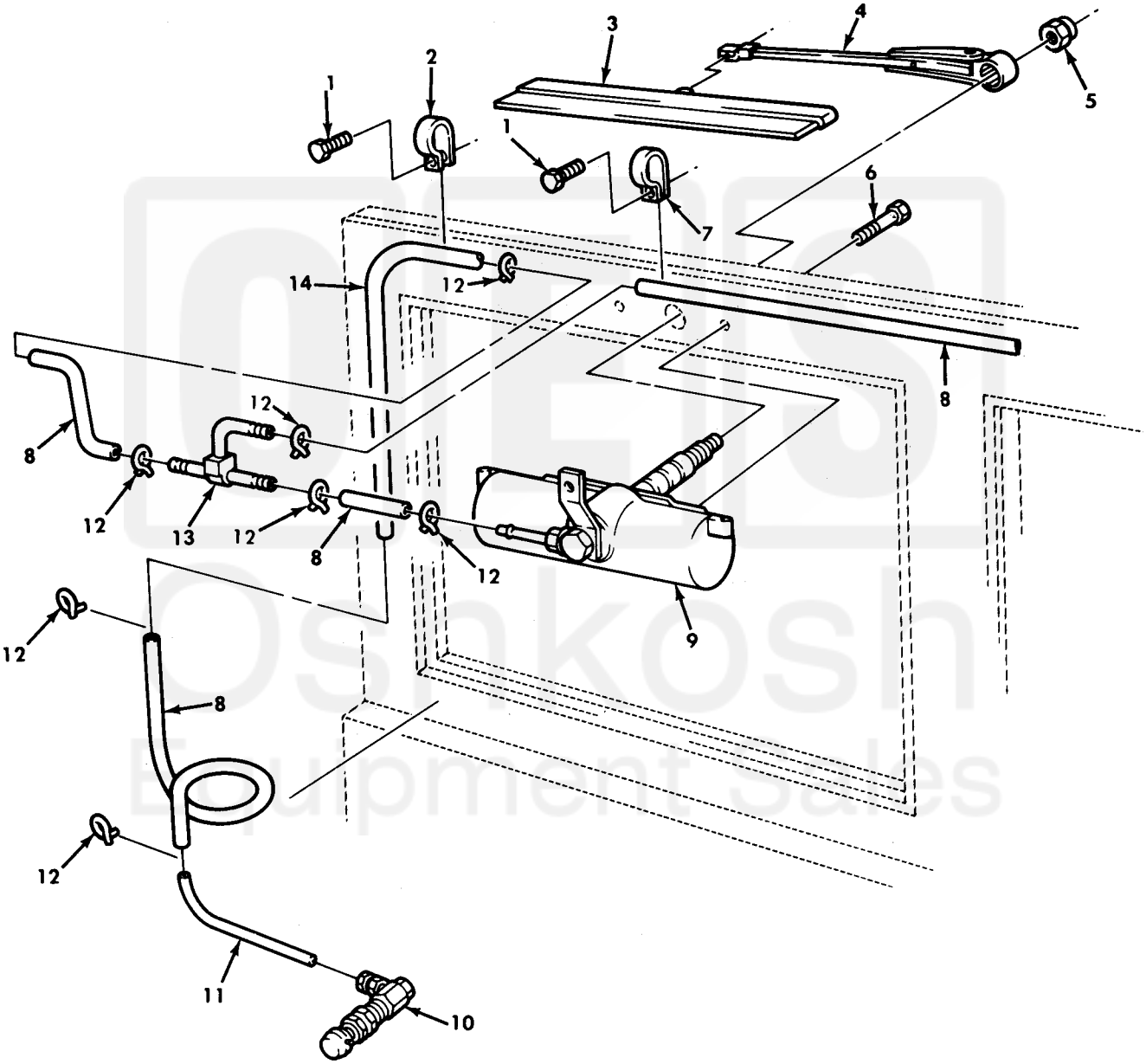

Figure 435. Windshield Wiper Arm, Blade, and Mounting Hardware.

Current part is item (5) on diagram. Available at www.oshkoshequipment.com

Current part is item (5) on diagram. Available at www.oshkoshequipment.com

(1) ITEM NO	(2) SMR CODE	(3) NSN	(4) CAGEC	(5) PART NUMBER	(6) DESCRIPTION AND USABLE ON CODE (UOC)	(7) QTY
					GROUP 2202 ACCESSORY ITEMS	
					FIG. 435 WINDSHIELD WIPER ARM,BLADE, AND MOUNTING HARDWARE	
1	PAOZZ	5305-00-855-0957	96906	MS24629-46	SCREW,TAPPING.....	4
2	PAOZZ	5340-00-057-2890	96906	MS21333-3	CLAMP,LOOP.....	3
3	PAOZZ	2540-00-255-9212	96906	MS53048-10	BLADE,WINDSHIELD WI.....	2
4	PFOZZ	2540-00-050-0810	96906	MS53049-1	ARM,WINDSHIELD WIPE.....	2
5	PAOZZ	5310-00-705-8965	19207	7058965	NUT,PLAIN,CAP.....	2
6	PAOZZ	5305-00-165-8252	19207	7372704	SCREW.....	4
7	PAOZZ	5340-00-984-8540	96906	MS21333-102	CLAMP,LOOP.....	1
8	MOOZZ		19207	7331422	HOSE,NONMETALLIC MAKE FROM HOSE,P/N 11639682-1.....	1
9	PAOZZ	2540-00-391-4322	60703	22191	MOTOR,WINDSHIELD WI FOR MOTOR REPLACEMENT ORDER ELECTRIC WIPER KIT P/N 57K3240,NSN 6105-01-461-7073....	2
10	PAOZZ	4820-00-753-9695	82484	DCSC#1	VALVE,ANGLE.....	1
11	PAOZZ	4710-00-277-5525	13829	A300578	TUBE,METALLIC.....	1
12	PAOZZ	4730-01-109-8001	19207	11662913	CLAMP,HOSE..... REPLACES 7363046.....	8
13	PAOZZ	4730-00-737-2701	19207	7372701	TEE,HOSE.....	1
14	MOOZZ		19207	8689206	TUBE,METALLIC MAKE FROM TUBE,P/N 8689206.....	1

END OF FIGURE

Current part is item (5) on diagram. Available at www.oshkoshequipment.com